hp 233A

HEWLETT-PACKARD COMPANY / OPERATING AND SERVICE MANUAL

233A

AUDIO OSCILLATOR

MANUAL CHANGES

MODEL 233A

AUDIO OSCILLATOR

Manual Serial Prefixed: 003-
Manual Printed: 5/61

To adapt this manual to instruments with other serial prefixes check for errata below, and make changes shown in tables.

Instrument Serial Prefix	Make Manual Changes	Instrument Serial Prefix	Make Manual Changes
003-	ERRATA		

ERRATA: In Table 5-1, Replaceable Parts,

R57: Change description to include "factory selected component, average value shown".

V1: Change to Tube, electron: 6SJ7; Mfr. 33173; hp Stock No. 1923-0065; TQ=2; RS=2.

Under MISCELLANEOUS,

Change hp Stock No. AC-10C to 5060-0632.
Change hp Stock No. AC-10D to 5060-0633.
Change hp Stock No. G-74C to 0370-0025.
Change hp Stock No. G-74N to 0370-0035.
Change hp Stock No. G-74Z to 0370-0045.

In schematic diagram of Figure 4-4,

Add an asterisk beside R57.

The three 6.3 volt windings on power transformer T1 are connected as shown in the following partial diagram.

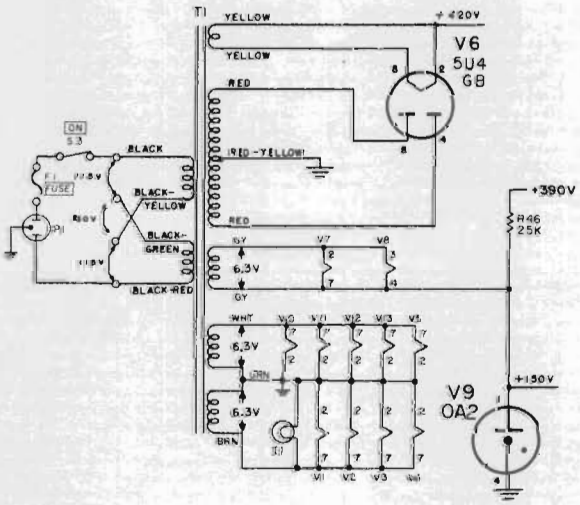

OPERATING AND SERVICING MANUAL

MODEL 233A
AUDIO OSCILLATOR

SERIALS PREFIXED: 003 -

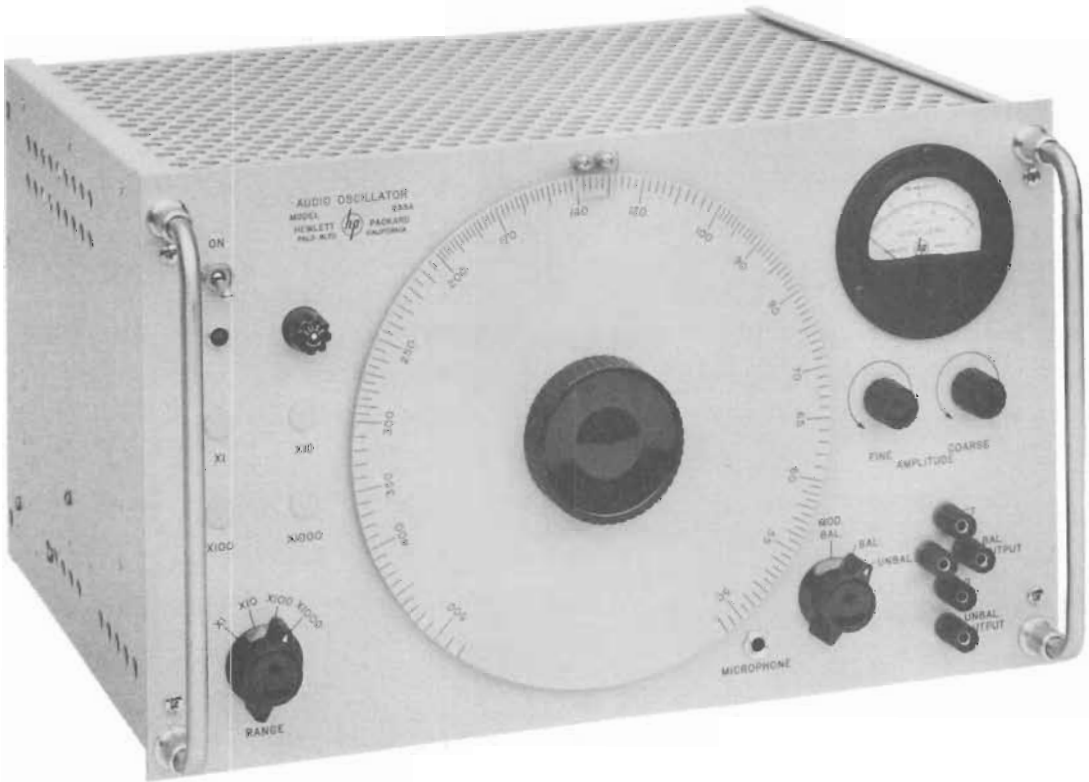

Copyright HEWLETT-PACKARD COMPANY 1956
1501 PAGE MILL ROAD, PALO ALTO, CALIFORNIA, U. S. A.

00099-2

Printed: May 1961

SPECIFICATIONS

FREQUENCY RANGE:	50 cps to 500 kc. 4 decade bands.
FREQUENCY DIAL:	Effective scale length 85 in.
FREQUENCY STABILITY	±2% under normal room temperatures including initial warmup. ±10% line voltage variations result in negligible change in output frequency.
FREQUENCY ADJUSTMENT:	May be standardized periodically for maximum calibration accuracy (approximately 1%).
OUTPUT NO. 1:	3 watts into 600-ohm balanced load (42.5 volts), 5 kc to 500 kc. Internal impedance approximately 100 ohms, 5 kc to 100 kc; approximately 200 ohms at 500 kc. (Maximum output may be less with Function switch in MOD. BAL. position.)
OUTPUT NO. 2:	Approximately 6 volts into a 600-ohm load, 50 cps to 500 kc, one terminal at ground. Internal impedance approximately 6 ohms.
FREQUENCY RESPONSE:	Output No. 1 - ±1 db, 5 kc to 500 kc. Output No. 2 - ±1 db, 50 cps to 500 kc.
DISTORTION:	Output No. 1 - Less than 1%, 10 kc to 100 kc at 2 watts; Less than 3%, 10 kc to 100 kc at 3 watts; Less than 4%, 5 kc to 500 kc at 3 watts. Output No. 2 - Less than 1% distortion operating into 600-ohm load, 50 cps to 100 kc. Less than 3%, 100 kc to 500 kc.
HUM VOLTAGE:	Less than 0.1% of full output.
AMPLITUDE CONTROL:	Adjust level on both No. 1 and No. 2 output terminals.
VOLTMETER:	Monitors output No. 1 in volts and dbm (reference, 0 dbm = 1 mw in 600 ohms).
POWER SUPPLY:	115/230 volts ±10%, 50/1000 cps, approximately 185 watts.
DIMENSIONS:	Cabinet Mount: 17-1/4 in. wide, 11 in. high, 15 in. deep.
WEIGHT:	Net: 39 lbs., shipping: 48 lbs.

TABLE OF CONTENTS

Section		Page
I	GENERAL DESCRIPTION	I-1
1-1	General	I-1
1-2	Inspection	I-1
1-3	Power Cable	I-1
1-4	230 Volt Operation	I-1
II	OPERATING INSTRUCTIONS	II-1
2-1	Controls and Terminals	II-1
2-2	Operation	II-1
2-3	Standardization	II-2
III	CIRCUIT DESCRIPTION	III-1
3-1	General	III-1
IV	MAINTENANCE	IV-1
4-1	General	IV-1
4-2	Cover and Bottom Plate Removal	IV-1
4-3	Lubrication	IV-1
4-4	Trouble Shooting -- General	IV-1
4-5	Power Supply Maintenance	IV-1
4-6	Oscillator Section Maintenance	IV-1
4-7	Checking Frequency Calibration	IV-2
4-8	Amplifier Section Maintenance	IV-2
V	REPLACEABLE PARTS	V-1
5-1	Introduction	V-1
5-2	Ordering Information	V-1

LIST OF ILLUSTRATIONS

Number	Title	Page
3-1	Block Diagram	III-1
4-1	Top View with Cover Removed	IV-0
4-2	Bottom View with Bottom Plate Removed	IV-3
4-3	Resistor Board Details	IV-4
4-4	Schematic Diagram	IV-6

SECTION I
GENERAL DESCRIPTION

1-1 GENERAL

This Carrier Test Oscillator is designed for checking carrier current systems operating at frequencies up to 500 kc. In connection with a selective type vacuum tube voltmeter, it is possible to determine complete response characteristics of complicated transmission systems.

The instrument is designed to work into a 600-ohm balanced load, and delivers a large amount of power so that tests over loops 100 to 200 miles in length may be made. It is possible to amplitude modulate the output so that communication is available on the line to facilitate tests. The output circuit is well balanced to ground for carrier voltages. A single-ended low voltage system is provided for checking audio circuits. A built in voltmeter monitors the output level from the balanced output terminals. Output frequency is read on a 9" diameter individually calibrated dial.

1-2 INSPECTION

This instrument has been thoroughly tested and inspected before being shipped and is ready for use when received.

After the instrument is unpacked, the instrument should be carefully inspected for damage received in transit. If any shipping damage is found, follow the procedure outlined in the "Claim for Damage in Shipment" page of this instruction book.

1-3 POWER CABLE

To protect operating personnel, the National Electrical Manufacturers' Association (NEMA) recommends that the instrument panel and cabinet be grounded. All Hewlett-Packard instruments are equipped with a three-conductor power cable which, when plugged into an appropriate receptacle, grounds the instrument. The offset pin on the power cable three-prong connector is the ground wire.

To preserve the protection feature when operating the instrument from a two-contact outlet, use a three-prong to two-prong adapter and connect the green pigtail on the adapter to ground.

1-4 230 VOLT OPERATION

This instrument is normally shipped from the factory wired for operation from a nominal 115 volt 50-1000 cycle source. If operation from a 230 volt supply is desired the dual 115 volt primary transformer windings can easily be reconnected from a parallel to a series arrangement. Refer to the schematic drawing for details. The power fuse must be changed from a 1.6 ampere slow blow to a 0.8 ampere slow blow type when changing from 115 volt to 230 volt operation.

SECTION II
OPERATING INSTRUCTIONS

2-1 CONTROLS AND TERMINALS

ON -
Turn on the power to the instrument from the power line. The indicator lamp will glow when the switch is in the ON position.

RANGE -
Select the frequency range of operation.

MOD. BAL. -BAL. -UNBAL. -
This three position switch performs the following functions:

MOD. BAL.
Position connects the oscillator output into the modulator where it is amplitude modulated, at voice frequencies, by the microphone and sent through the amplifier to the "Balanced Output" terminals.

BAL.
Position connects the output of the oscillator into the amplifier for balanced output.

UNBAL.
Position feeds the oscillator output through the single-ended amplifier to the "Unbalanced Output" terminals.

AMPLITUDE - FINE, COARSE -
Provide a fine and coarse adjustment of the oscillator output voltage.

X1, X10, X100, X1000 -
These screwdriver adjustments on the control panel are used to standardize each frequency range.

MICROPHONE -
Connect a field telephone set into the modulator circuit. The field telephone set consists of a carbon microphone, battery, and output transformer to work into a 600 ohm line.

FUSE, 1.6 amp -
The fuseholder, located on the control panel, contains a 1.6 ampere cartridge fuse, 0.8 ampere for 230 volt operation. To replace the fuse, unscrew the fuseholder cap and remove the blown fuse, insert a new fuse of the same type and replace the fuseholder cap.

BAL. OUTPUT -
Up to 42.5 volts into 600 ohm load available balanced to ground over the frequency range 5 kc to 500 kc. The Output Level meter monitors the voltage across these terminals. The two binding posts to the left of the BAL. OUTPUT designation are connected to the output transformer. The binding post marked CT is connected to the center tap of the output transformer. The binding post marked G is connected to the chassis. The binding posts are arranged to have 3/4 inch between centers of any two posts.

UNBAL. OUTPUT -
This binding post and the binding post marked G, are the terminals of the unbalanced output section of the instrument. Up to 6v into a 600 load is available over the range 50 cps to 500,000 cps.

2-2 OPERATION

Turn on the instrument and allow a minimum warm-up period of fifteen minutes.

Procedure for Obtaining Balanced Output Voltage -

a. Set the tuning dial and Range switch to proper positions to get desired frequency.

b. Set MOD. BAL. -BAL. -UNBAL. switch to BAL. position.

c. Adjust COARSE-FINE AMPLITUDE controls for desired output level. 600 ohms load across BAL. OUTPUT terminals.

Procedure for Obtaining Unbalanced Output Voltage -

a. Repeat steps a and b above. Set output voltage at 42.5 volts for maximum unbalanced output.

b. Set MOD. BAL. -BAL. -UNBAL. switch to UNBAL.

Procedure for Modulating Balanced Output -

a. Use procedure for obtaining balanced output voltage. Set output voltage to maximum.

b. Plug carbon mike circuit into MICROPHONE jack and set MOD. BAL. -BAL. -UNBAL. switch to the MOD. BAL. position.

2-3 STANDARDIZATION

Compare the output of the Audio Oscillator with a standard frequency source, by means of Lissajous figures. The dial and RANGE switch should be set as follows when the instrument is being standardized.

Range	Dial
X1	100
X10, X100, X1000	50

To adjust the oscillator to agree with the standard, turn the appropriate screwdriver adjustment on the control panel.

SECTION III
CIRCUIT DESCRIPTION

3-1 GENERAL

The Model 233A Audio Oscillator consists of an oscillator, modulator, single-ended amplifier, push-pull amplifier, output voltmeter, and regulated power supply.

The oscillator is a two-stage resistance-coupled amplifier over which both positive and negative feedback are applied. The positive feedback network is a frequency-selective resistance-capacitance combination which is used to control the frequency of oscillation. Negative feedback is used to stabilize the operation of the circuit. The amount of negative feedback is determined by a resistance network which contains a thermally sensitive element in the form of a 10-watt incandescent lamp. This element controls the amount of feedback in accordance with the amplitude of oscillation and consequently maintains the proper operating point in the system.

The modulator uses a 6SA7 tube. The oscillator voltage is applied to the modulator input grid G1 and the carbon microphone output is applied to control grid G3. An amplitude modulated carrier voltage is obtained at the plate of the tube.

The single-ended amplifier is a two-stage resistance-coupled output amplifier. Feedback is used in this circuit to reduce distortion and to provide a good frequency response.

This amplifier is designed to deliver 6 volts into a 600-ohm load over a 50 to 500,000 cycles/sec frequency range.

The balanced output amplifier is transformer-coupled with push-pull output tubes. Negative feedback is also used in this amplifier to reduce distortion and improve frequency response.

The voltmeter section is a conventional d-c milliammeter and crystal rectifier system. It is calibrated in volts RMS and decibels. The decibel reference level is 1 milliwatt into 600 ohms impedance.

The power supply is a conventional full-wave rectifier circuit, filter, and electronic voltage regulator.

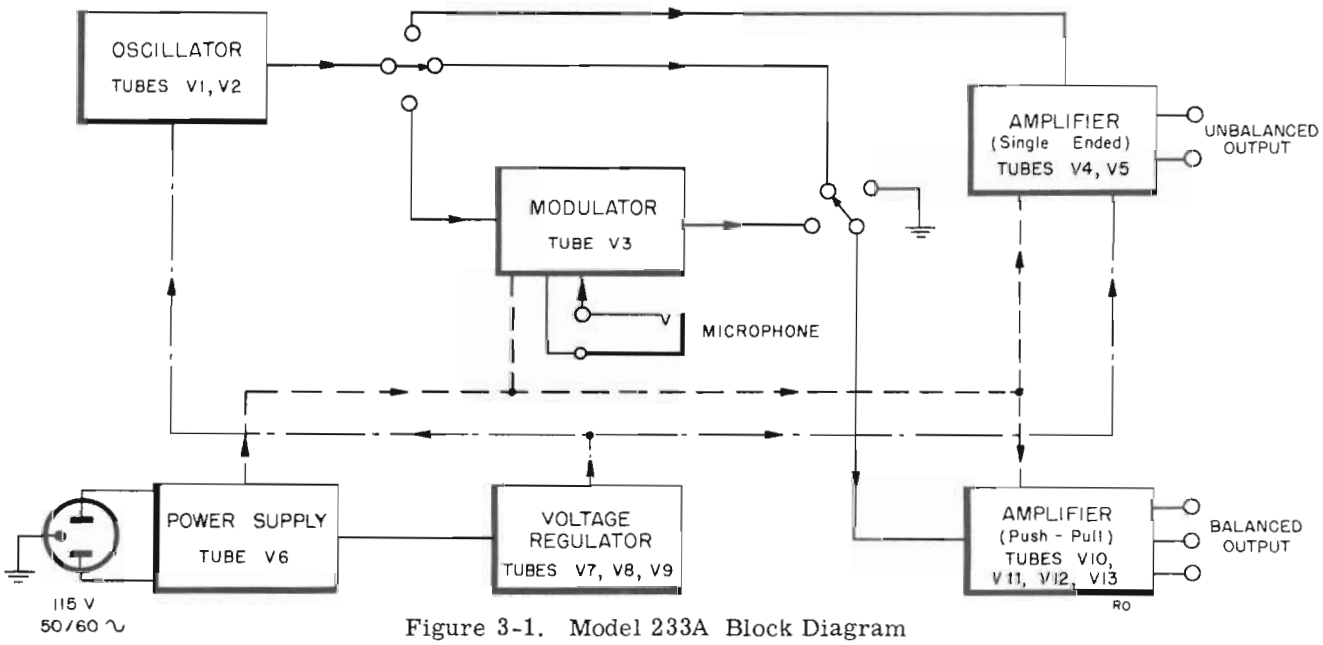

Figure 3-1. Model 233A Block Diagram

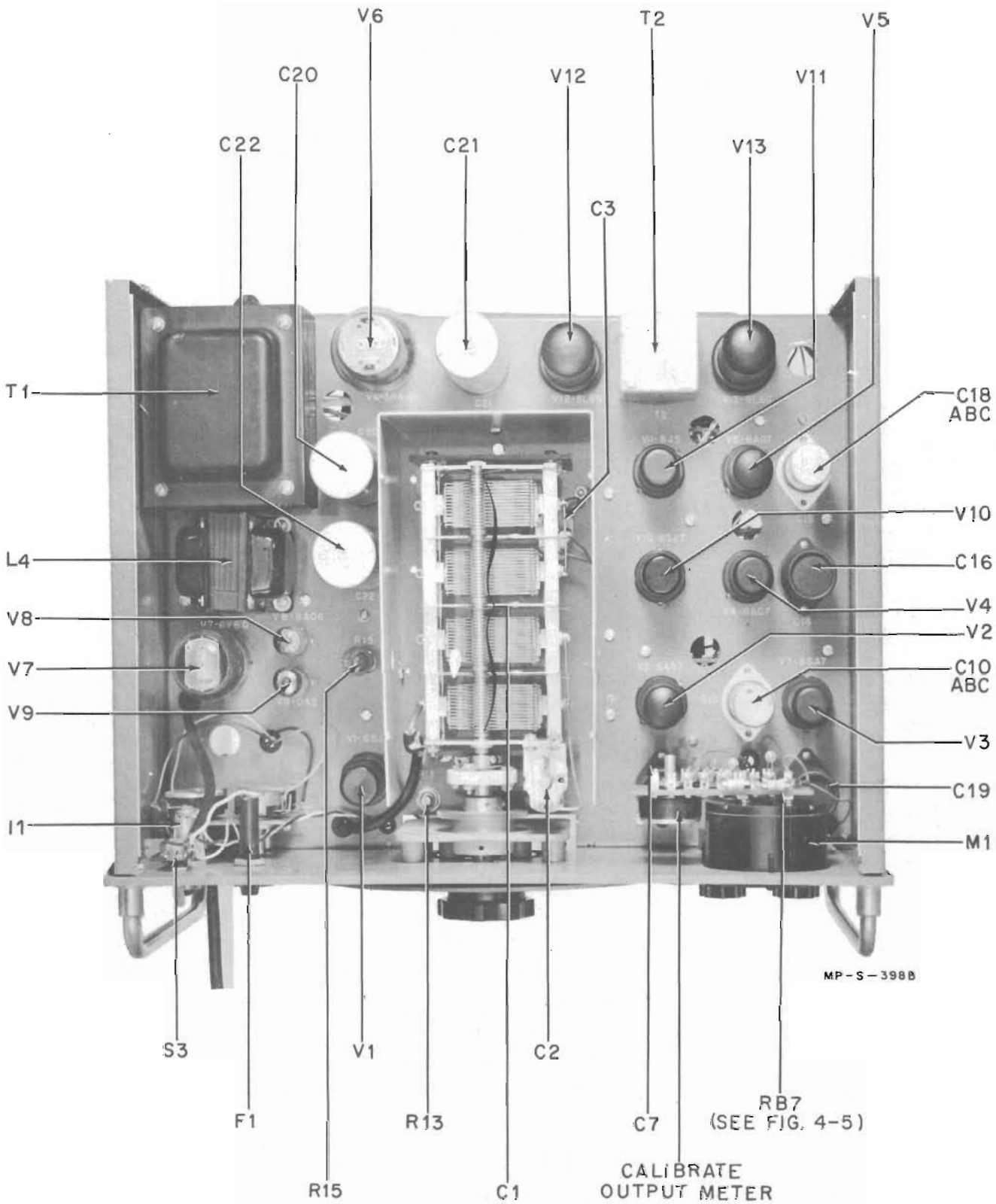

Figure 4-1. Model 233A Top View with Cover Removed

SECTION IV
MAINTENANCE

4-1 GENERAL

This section contains information for maintenance of the Model 233A oscillator. The material in this section is as follows:

4-2 Cover and Bottom Plate Removal
4-3 Lubrication
4-4 Trouble Shooting -- General
4-5 Power Supply Maintenance
4-6 Oscillator Section Maintenance
4-7 Checking Frequency Calibration
4-8 Amplifier Section Maintenance

4-2 COVER AND BOTTOM PLATE REMOVAL

The cover is removed by unscrewing the four screws, which fasten the cover to the back of the instrument, and sliding the cover toward the rear of the instrument.

The bottom plate comes off when the four screws, one in each corner of the plate, are removed.

4-3 LUBRICATION

Every six months the tuning capacitor drive should be lubricated and the dust blown out of the instrument. Put one drop of light machine oil in each oil hole in the tuning drive casting.

4-4 TROUBLE SHOOTING—GENERAL

The Model 233A oscillator is constructed of the finest quality parts and should give many years of trouble free service. Normally, faulty operation will be caused by defective tubes and not component failure. When faulty operation is experienced, the power supply should always be checked first to insure that it is working perfectly before checking any other circuits.

4-5 POWER SUPPLY MAINTENANCE

Weak tubes are generally easily detected by checking circuit operation at low supply voltage. To properly do this, it is desirable to have a variable voltage transformer equipped with an accurate monitoring voltmeter. The rectifier tube V6 can be checked by measuring the d-c voltage at pin 2 with the line voltage at 115 volts. It should read approximately 420 volts. Lower the line voltage 10% to 103 volts and note the d-c voltage reading. It should drop 10% to approximately 375 volts. Allow the supply voltage to remain at 103 volts for 1 minute. If the 375 volts slowly drops after a few seconds, V6 has low emmission and must be replaced.

Proper action of the electronic regulator can be checked as follows: Adjust the line voltage to 115 volts. Using an accurate d-c meter measure the voltage at pin 8 of V7. It should read 240 volts. If not, adjust R53. Reduce the line voltage to 103 volts. The regulated d-c voltage should not change more than about 1 volt. If it slowly decreases after a few seconds, V7 is weak. If it increases, V8 is weak. Increase the line voltage to 127 volts. If the 240 volts increases slightly, V7 is weak. If it decreases, V8 is defective. V9 may also be a cause of poor regulation, however, V7 and V8 should be known new, good tubes before changing V9. Always check the regulated voltage level after changing power supply tubes. Reset to +240 volts if needed, with R53.

4-6 OSCILLATOR SECTION MAINTENANCE

The frequency dial is attached to the mounting hub by three screws spaced 120° apart. The mechanical stop for the instrument is a part of the dial. If the dial is removed, mark the dial and the mounting hub so the dial can be returned to the same position when replaced.

CAUTION: If the tuning shaft is rotated too far in either direction while the dial is removed or if the dial is not properly oriented on the mounting hub when replaced, instrument calibration will be destroyed and it will be almost impossible to get the calibration back within specifications.

Once instrument calibration has been destroyed, it will be necessary to have a new hand-calibrated dial made for the instrument. If you have any sort of difficulty with the dial drive mechanism, contact your authorized Hewlett-Packard sales office for assistance. Many of these offices have repair facilities capable of repairing your instrument or, in any case, they can expedite repair of your instrument.

When working on the instrument, extreme care must be taken not to disturb any wiring in the oscillator section. Lead dress is very critical as to frequency calibration at 500 kc. One of the most critical leads is the yellow lead from the output capacitor C7 to R13. It is possible to correct 500 kc calibration by proper placement of this lead.

4-7 CHECKING FREQUENCY CALIBRATION

In order to accurately check frequency calibration a source of standard frequencies will be required that has an accuracy of at least 0.1% or better. An ⓗⓟModel 100D/E frequency standard is excellent for this purpose. The output from the Model 233A oscillator should be fed to the vertical input of an oscilloscope. The standard frequencies should be fed into the horizontal input. By observing the Lissajou patterns and knowing the standard frequency being fed to the oscilloscope, the oscillator frequency can be accurately determined.

Correcting the frequency calibration can be done as follows: Set 50 kc on calibration with R12. Attempt to set 500 kc with C4. If C4 will not provide enough range, try moving the yellow lead between C7 and R13. Again attempt to set 500 kc with C4. If C4 is at minimum capacity, it is permissible to add C31, not more than 5 pf across R14. If C14 is at maximum, it is permissible to add as much as 10 pf in parallel with C29. C31 and/or C29 may be removed if needed. Excessive change of lead dress may make the top end of the X100 range out of specification as to flatness of output level. Correction of this involves a rather involved process requiring considerable experience. If you experience this sort of trouble, contact your authorized Hewlett-Packard sales office for assistance in getting the instrument repaired at the closest authorized repair station or at the factory if necessary.

Weak oscillator tubes will cause higher than normal distortion and/or output amplitude that is not constant with frequency. Whenever the oscillator tubes are changed, the oscillator output level must be checked and reset if needed. This is done by connecting an ac vtvm such as an ⓗⓟModel 400D/H/L from the junction of C7 and R23 to ground. Adjust the oscillator frequency to 10 kc. Adjust R13 if necessary so that the oscillator is exactly 22.5 volts. Stable operation can be checked by operating the range switch from range to range. The output voltage should stabilize in less than 5 seconds after changing ranges. If it does not, oscillator tubes V1 and/or V2 are defective, or the lamp R15 (10 watt, 220 volt) should be replaced. Lamps generally must be selected to find one that is stable. Some lamps will allow the output to change drastically when jarred. The output level will need to be reset if the lamp is replaced. When V2 is replaced, the calibration should be rechecked at 500 kc and reset if needed.

4-8 AMPLIFIER SECTION MAINTENANCE

The other tubes in the instrument are not critical with the exception of V12 and V13. It is necessary to check these tubes for matched operation in order to insure that the distortion is within rated specification. Audio distortion is best checked with an ⓗⓟModel 330B Distortion Analyzer. The test should be performed at 5 kc. The source of the distortion can be determined by measuring the distortion of the oscillator alone at the AMPLITUDE CONTROL R25 and then at the output terminals. If the distortion of the oscillator alone is well under 1% and the output signal contains excessive distortion at either the balanced or unbalanced outputs, the cause of the distortion can be located in the amplifier circuitry associated with the output in question. Weak or gassy tubes are the general cause of distortion and should always be tried first. Quite often a new tube can cause high distortion. Therefore, always try several new tubes before changing any components.

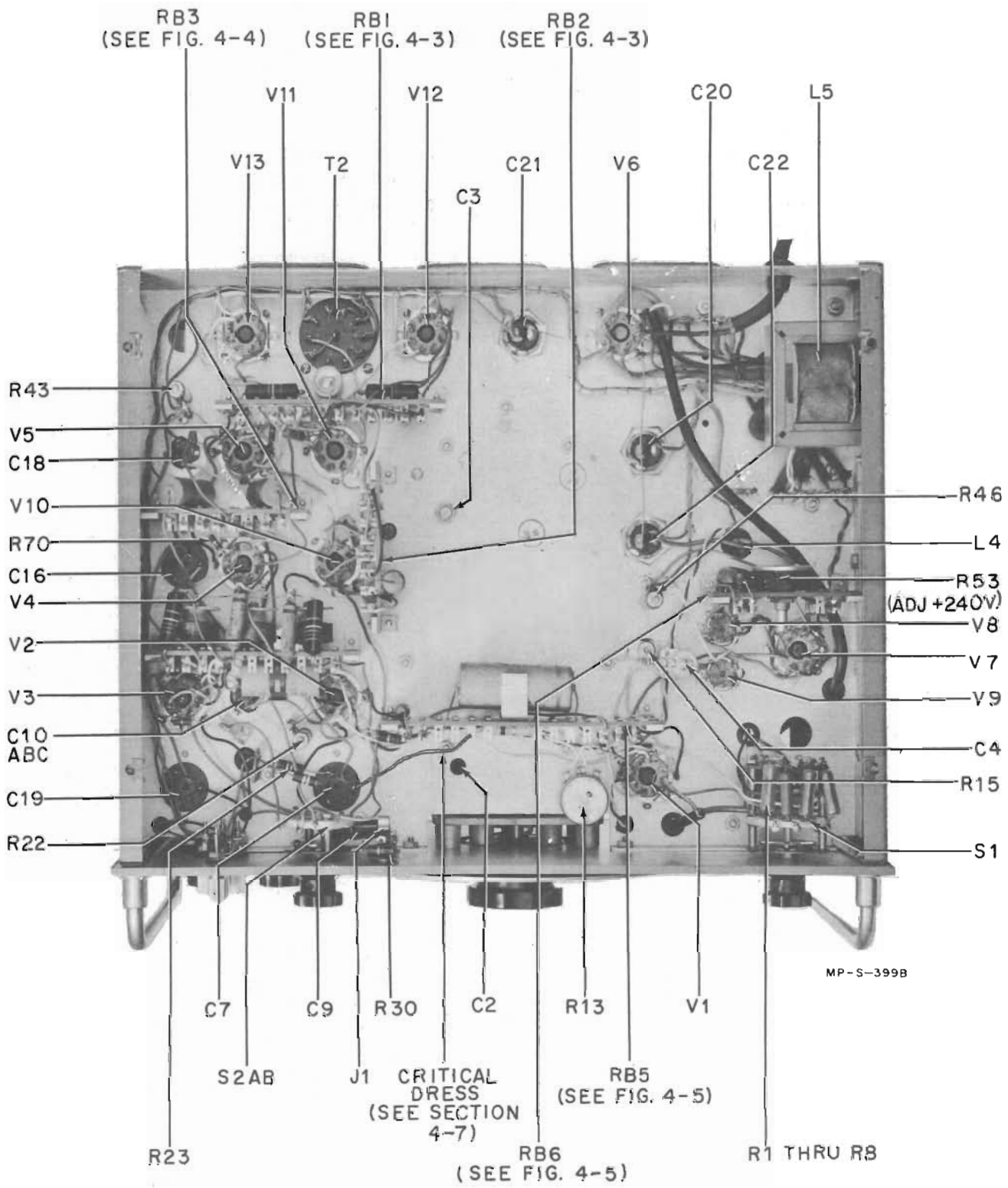

Figure 4-2. Model 233A Bottom View with Bottom Plate Removed

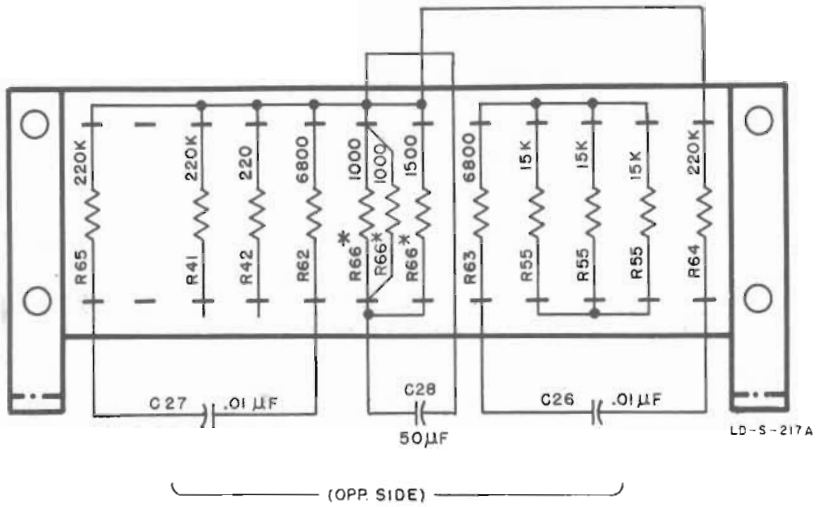

RB1

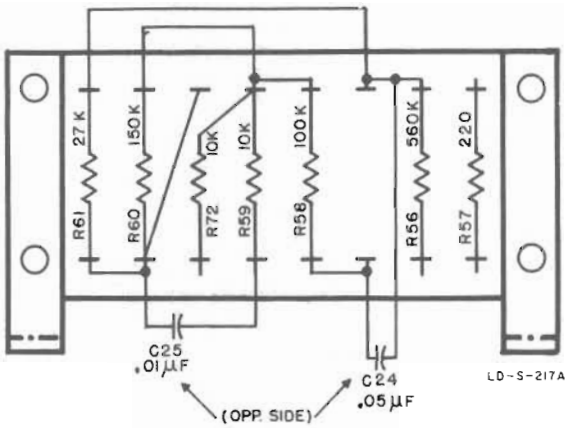

RB2

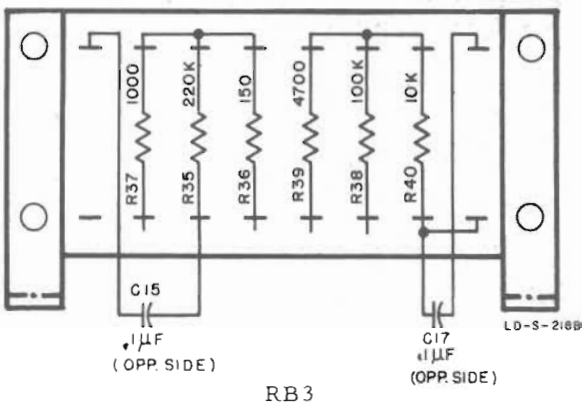

RB3

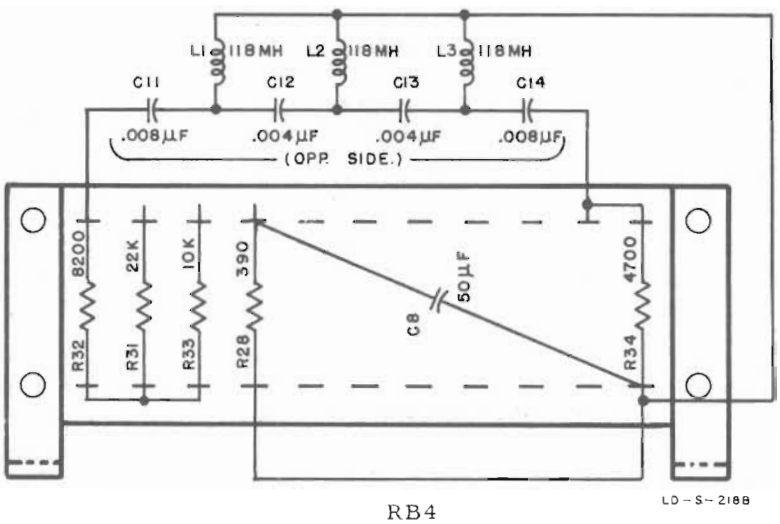

RB4

Figure 4-3. Model 233A Resistor Board Details (Sheet 1 of 2)

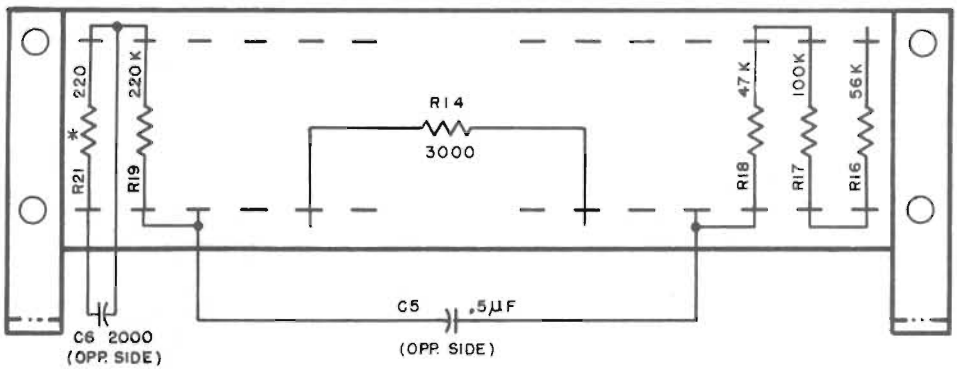

RB5

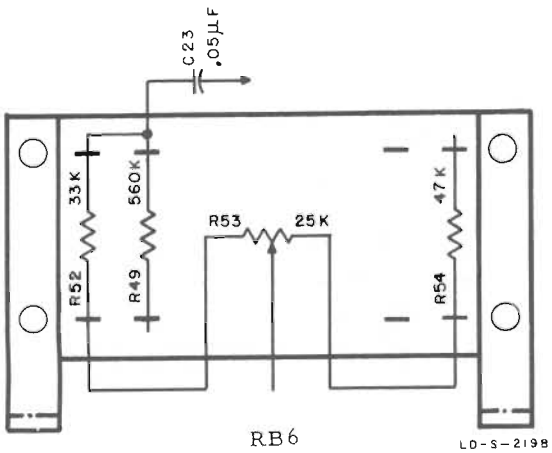

RB6

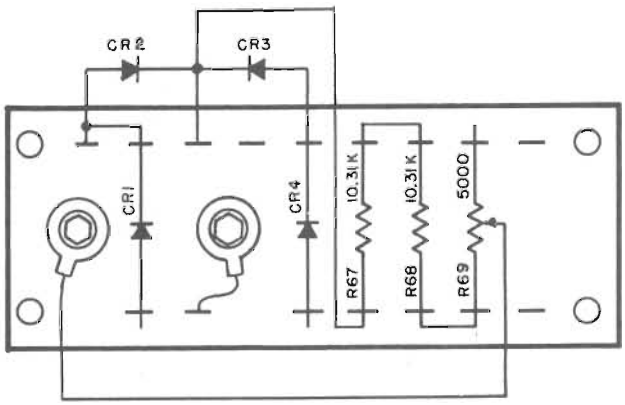

RB7

Figure 4-3. Model 233A Resistor Board Details (Sheet 2 of 2)

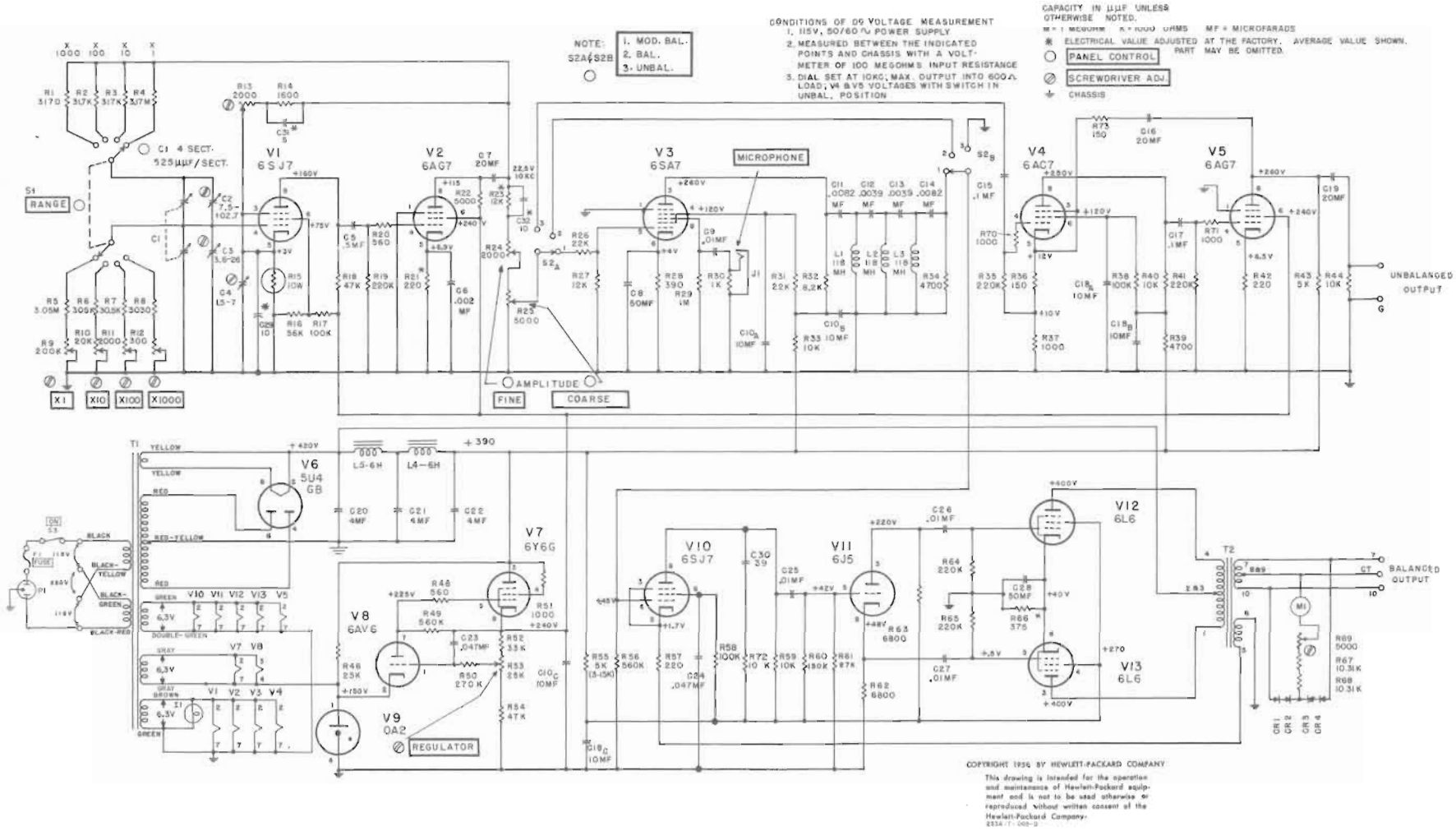

Figure 4-4. Model 233A Audio Oscillator

SECTION V
REPLACEABLE PARTS

5-1 INTRODUCTION

This section contains information for ordering replacement parts for the 233A Audio Oscillator.

Table 5-1 lists replaceable parts in alpha-numerical order of their reference designators. Detailed information on a part used more than once in the instrument is listed opposite the first reference designator applying to the part. Other reference designators applying to the same part refer to the initial designator. Miscellaneous parts are included at the end of the list. Detailed information includes the following:

a. Reference designator.

b. Full description of the part.

c. Manufacturer of the part in a five-digit code; see list of manufacturers in appendix.

d. Hewlett-Packard stock number.

e. Total quantity used in the instrument (TQ col).

f. Recommended spare quantity for complete maintenance during one year of isolated service (RS column).

5-2 ORDERING INFORMATION

To order a replacement part, address order or inquiry either to your authorized Hewlett-Packard sales office or to

CUSTOMER SERVICE
Hewlett-Packard Company
395 Page Mill Road
Palo Alto, California,

or, in Western Europe, to

Hewlett-Packard S.A.
Rue du Vieux Billard No. 1
Geneva, Switzerland.

Specify the following information for each part:

a. Model and serial number of instrument.

b. Hewlett-Packard stock number.

c. Circuit reference designator.

d. Description.

To order a part not listed in table 5-1, give a complete description of the part and include its function and location.

Table 5-1. Replaceable Parts (Sheet 1 of 7)

Ckt Ref	Description	Mfr	Stock No.	TQ	RS		
C1	Capacitor: variable, air, 4-ganged sections, 12.4 - 535 pf/sect., clockwise rotation	76854	0121-0002	1	1		
C2	Capacitor: variable, air, 7.5 - 102.7 pf	84970	0121-0008	1	1		
C3	Capacitor: variable, air, 3.6 - 26 pf	80486	0121-0007	1	1		
C4	Capacitor: variable, ceramic, 1.5 - 7 pf, 500 vdcw	72982	0130-0003	1	1		

Table 5-1. Replaceable Parts (Sheet 2 of 7)

Ckt Ref	Description	Mfr *	hp Stock No.	TQ*	RS*		
C5	Capacitor: fixed, paper, 0.5μf ±10%, 400 vdcw	14655	0160-0024	1	1		
C6	Capacitor: fixed, paper, 0.0022 μf ±10%, 600 vdcw	56289	0160-0007	1	1		
C7	Capacitor: fixed, electrolytic, 20 μf, 450 vdcw	56289	0180-0011	3	1		
C8	Capacitor: fixed, electrolytic, 50 μf -10% +200%, 50 vdcw	37942	0180-0029	1	1		
C9	Capacitor: fixed, paper, 0.01 μf ±10%, 600 vdcw	56289	0160-0002	4	1		
C10A-C	Capacitor: fixed, electrolytic, 3 sections 10 μf/sect., 450 vdcw	56289	0180-0017	2	1		
C11	Capacitor: fixed, paper, 0.0082 μf ±10%, 600 vdcw	56289	0160-0011	2	1		
C12, 13	Capacitor: fixed, paper, 0.0039 μf ±10%, 600 vdcw	56289	0160-0009	2	1		
C14	Same as C11						
C15	Capacitor: fixed, paper, 0.1 μf ±10%, 600 vdcw	56289	0160-0001	2	1		
C16	Same as C7						
C17	Same as C15						
C18A-C	Same as C10						
C19	Same as C7						
C20 thru C22	Capacitor: fixed, paper 4 μf ±10%, 600 vdcw	72758	0160-0077	3	1		
C23, 24	Capacitor: fixed, paper 0.047 μf ±10%, 600 vdcw	56289	0160-0005	2	1		
C25 thru C27	Same as C9						
C28	Capacitor: fixed, electrolytic, 50 μf -10% +200%, 50 vdcw	37942	0180-0029	1	1		
C29	Capacitor: fixed, ceramic, 10 pf ±0.5%, 500 vdcw Optimum value selected at factory. Average value shown	04222	0150-0009	2	1		

* See introduction to this section

Table 5-1. Replaceable Parts (Sheet 3 of 7)

Ckt Ref	Description	Mfr *	hp Stock No.	TQ*	RS*		
C30	Capacitor: fixed, mica, 39 pf ±10%, 500 vdcw	00853	0140-0021	1	1		
C31	Capacitor: fixed, ceramic, 5 pf ±0.5%, 500 vdcw Optimum value selected at factory. Average value shown	72982	0150-0008	1	1		
C32	Same as C29						
CR1 thru CR4	Diode, germanium	73293	1910-0011	4	4		
F1	Fuse, cartridge: 1.6A, for 115V operation	71400	2110-0005	1	10		
	Fuse, cartridge: 0.8A, for 230V operation	75915	2110-0020				
I1	Lamp, incandescent: 6-8 volts, GE type 12	24455	2140-0012	1	1		
J1	Jack, telephone	82389	1251-0066	1	1		
L1 thru L3	Inductor: 118 mh	09250	9140-0006	3	1		
L4	Reactor: 6H @125 MA, 240 ohms	28480	9110-0002	1	1		
L5	Reactor: 6H @125 MA, 240 ohms	28480	9110-0004	1	1		
M1	Meter, milliammeter	55026	1120-0061	1	1		
P1	Cable, power	70903	8120-0015	1	1		
R1 thru R8	Part of Range Switch Assembly - S1 (not separately replaceable)						
R9	Resistor: variable, composition, 200,000 ohms ±20%, 1/4 W	12697	2100-0014	1	1		
R10	Resistor: variable, composition, 20,000 ohms ±20%, 1/2 W	12697	2100-0012	1	1		
R11	Resistor: variable, composition, 2000 ohms ±20%, 1/4 W	12697	2100-0010	2	1		

* See introduction to this section

Table 5-1. Replaceable Parts (Sheet 4 of 7)

Ckt Ref	Description	Mfr *	ⓗⓟ Stock No.	TQ*	RS*		
R12	Resistor: variable, wirewound, 300 ohms ±20%, 2W	0000B	2100-0038	1	1		
R13	Resistor: variable, composition, linear taper, 2000 ohms ±10%, 2W	71450	2100-0005	1	1		
R14	Resistor: fixed, wirewound, 1600 ohms ±5%, 1W	75042	0812-0004	1	1		
R15	Lamp, incandescent: 250V, 10 W	24455	2140-0007	1	1		
R16	Resistor: fixed, composition, 56,000 ohms ±10%, 1 W	01121	0690-5631	1	1		
R17	Resistor: fixed, composition, 100,000 ohms ±10%, 2 W	01121	0693-1041	3	1		
R18	Resistor: fixed, composition, 47,000 ohms ±10%, 1 W	01121	0690-4731	2	1		
R19	Resistor: fixed, composition, 220,000 ohms ±10%, 1 W	01121	0690-2241	5	2		
R20	Resistor: fixed, composition, 560 ohms ±10%, 1W	01121	0690-5611	1	1		
R21	Resistor: fixed, composition, 220 ohms ±10%, 1 W Optimum value selected at factory. Average value shown	01121	0690-2211	1	1		
R22	Resistor: fixed, wirewound, 5000 ohms ±10%, 10 W	35434	0816-0006	2	1		
R23	Resistor: fixed, composition, 12,000 ohms ±10%, 1 W Optimum value selected at factory. Average value shown.	01121	0690-1231	1	1		
R24	Same as R11						
R25	Resistor: variable, wirewound, 5000 ohms ±10%, 2 W	0000B	2100-0006	2	1		
R26	Resistor: fixed, composition, 22,000 ohms ±10%, 1/2 W	01121	0687-2231	1	1		
R27	Resistor: fixed, composition, 12,000 ohms ±10%, 1/2 W	01121	0687-1231	1	1		
R28	Resistor: fixed, composition, 390 ohms ±10%, 1 W	01121	0690-3911	1	1		

* See introduction to this section

Table 5-1. Replaceable Parts (Sheet 5 of 7)

Ckt Ref	Description	Mfr *	hp Stock No.	TQ*	RS*		
R29	Resistor: fixed, composition, 1 megohm ±10%, 1/2 W	01121	0687-1051	1	1		
R30	Resistor: fixed, composition, 1000 ohms ±10%, 1 W	01121	0690-1021	2	1		
R31	Resistor: fixed, composition, 22,000 ohms ±10%, 2 W	01121	0693-2231	1	1		
R32	Resistor: fixed, composition, 8200 ohms ±10%, 1 W	01121	0690-8221	1	1		
R33	Resistor: fixed, composition, 10,000 ohms ±10%, 2 W	01121	0693-1031	1	1		
R34	Resistor: fixed, composition, 4700 ohms ±10%, 1 W	01121	0690-4721	2	1		
R35	Same as R19						
R36	Resistor: fixed, composition, 150 ohms ±10%, 1 W	01121	0690-1511	2	1		
R37	Same as R30						
R38	Same as R17						
R39	Same as R34						
R40	Resistor: fixed, composition, 10,000 ohms ±10%, 1 W	01121	0690-1031	4	1		
R41	Same as R19						
R42	Resistor: fixed, composition, 220 ohms ±10%, 1 W	01121	0690-2211	2	1		
R43	Same as R22						
R44	Same as R40						
R45	This circuit reference not assigned						
R46	Resistor: fixed, wirewound, 25,000 ohms ±10%, 10W	35434	0816-0009	1	1		
R47	This circuit reference not assigned						
R48	Resistor: fixed, composition, 560 ohms ±10%, 1/2 W	01121	0687-5611	1	1		
R49	Resistor: fixed, composition, 560,000 ohms ±10%, 1 W	01121	0690-5641	2	1		

* See introduction to this section

Table 5-1. Replaceable Parts (Sheet 6 of 7)

Ckt Ref	Description	Mfr *	ⓟ Stock No.	TQ*	RS*		
R50	Resistor: fixed, composition, 270,000 ohms ±10%, 1 W	01121	0690-2741	1	1		
R51	Resistor: fixed, composition, 1000 ohms ±10%, 1/2 W	01121	0687-1021	3	1		
R52	Resistor: fixed, composition, 33,000 ohms ±10%, 1 W	01121	0690-3331	1	1		
R53	Resistor: variable, composition, 25,000 ohms ±20%, 1 W	0000B	2100-0009	1	1		
R54	Same as R18						
R55	Resistor: fixed, composition, 15,000 ohms ±10%, 2 W 3 - 15,000 ohms in parallel	01121	0693-1531	3	1		
R56	Same as R49						
R57	Same as R42						
R58	Same as R17						
R59	Same as R40						
R60	Resistor: fixed, composition, 150,000 ohms ±10%, 1 W	01121	0690-1541	1	1		
R61	Resistor: fixed, composition, 27,000 ohms ±10%, 1 W	01121	0690-2731	1	1		
R62, 63	Resistor: fixed, composition, 6800 ohms ±10%, 1 W	01121	0690-6821	2	1		
R64,65	Same as R19						
R66	Resistor: fixed, composition 375 ohms ±10%, 2 W 2 - 1000 ohms and 1 - 1500 ohms resistors in parallel. Optimum value selected at factory. Average value shown.	01121	0693-1021	2	1		
R67, 68	Resistor: fixed, composition, 10,310 ohms ±1%, 1 W	19701	0730-0031	2	1		
R69	Same as R25						
R70, 71	Same as R51						
R72	Same as R40						
R73	Same as R36						

* See introduction to this section

Table 5-1. Replaceable Parts (Sheet 7 of 7)

Ckt Ref	Description	Mfr *	Stock No.	TQ*	RS*		
S1	Range Switch Assembly	28480	233A-19W	1	1		
S2A, B	Switch, rotary	76854	3100-0188	1	1		
S3	Switch, toggle: SPST	04009	3101-0001	1	1		
T1	Transformer, power	28480	9100-0012	1	1		
T2	Transformer, output	78790	9120-0008	1	1		
V1	Tube, electron: 6SJ7	80131	1923-0037	2	2		
V2	Tube, electron: 6AG7	80131	1923-0016	2	2		
V3	Tube, electron: 6SA7	80131	1924-0002	1	1		
V4	Tube, electron: 6AC7	80131	1923-0014	1	1		
V5	Same as V2						
V6	Tube, electron: 5U4GB	80131	1930-0008	1	1		
V7	Tube, electron: 6Y6G	80131	1923-0040	1	1		
V8	Tube, electron: 6AV6	80131	1939-0001	1	1		
V9	Tube, electron: OA2	80131	1940-0004	1	1		
V10	Same as V1						
V11	Tube, electron: 6J5	80131	1921-0008	1	1		
V12, 13	Tube, electron: 6L6	80131	1923-0034	1	1		
	MISCELLANEOUS						
	Binding Post Assembly: black	28480	AC-10C	1	1		
	Binding Post Assembly: red	28480	AC-10D	1	1		
	Holder, fuse	75915	1400-0084	1	1		
	Knob: AMPLITUDE - FINE, COARSE	28480	G-74C	1	1		
	Knob: RANGE, MOD. BAL.	28480	G-74N	1	1		
	Knob: dial	28480	G-74Z	1	1		

* See introduction to this section

APPENDIX
CODE LIST OF MANUFACTURERS (Sheet 1 of 2)

The following code numbers are from the Federal Supply Code for Manufacturers Cataloging Handbooks H4-1 (Name to Code) and H4-2 (Code to Name) and their latest supplements. The date of revision and the date of the supplements used appear at the bottom of each page. Alphabetical codes have been arbitrarily assigned to suppliers not appearing in the H4 handbooks.

CODE NO.	MANUFACTURER	ADDRESS
00334	Humidial Co.	Colton, Calif.
00335	Westrex Corp.	New York, N.Y.
00373	Garlock Packing Co., Electronic Products Div.	Camden, N.J.
00656	Aerovox Corp.	New Bedford, Mass.
00781	Aircraft Radio Corp.	Boonton, N.J.
00853	Sangamo Electric Co., Cap. Div.	Marion, Ill.
00866	Goe Engineering Co.	Los Angeles, Calif.
00891	Carl E. Holmes Corp.	Los Angeles, Calif.
01121	Allen Bradley Co.	Milwaukee, Wis.
01255	Litton Industries, Inc.	Beverly Hills, Calif.
01281	Pacific Semiconductors, Inc.	Culver City, Calif.
01295	Texas Instruments, Inc. Semiconductor Components Div.	Dallas, Texas
01349	The Alliance Mfg. Co.	Alliance, Ohio
01561	Chassi-Trak Corp.	Indianapolis, Ind.
02114	Ferroxcube Corp. of America	Saugerties, N.Y.
02286	Cole Mfg. Co.	Palo Alto, Calif.
02660	Amphenol Electronics Corp.	Chicago, Ill.
02735	Radio Corp. of America Semiconductor and Materials Div.	Somerville, N.J.
02777	Hopkins Engineering Co.	San Fernando, Calif.
03508	G.E. Semiconductor Products Dept.	Syracuse, N.Y.
03705	Apex Machine & Tool Co.	Dayton, Ohio
03797	Eldema Corp.	El Monte, Calif.
04009	Arrow, Hart and Hegeman Elect. Co.	Hartford, Conn.
04062	Elmenco Products Co.	New York, N.Y.
04222	Hi-Q Division of Aerovox	Myrtle Beach, S.C.
04404	Dymec Inc.	Palo Alto, Calif.
04651	Special Tube Operations of Sylvania Electronic Systems	Mountain View, Calif.
04713	Motorola, Inc., Semiconductor Prod. Div.	Phoenix, Arizona
04732	Filtron Co., Inc. Western Division	Culver City, Calif.
04777	Automatic Electric Sales Corp.	Northlake, Ill.
05624	Barber Colman Co.	Rockford, Ill.
05783	Stewart Engineering Co.	Soquel, Calif.
06004	The Bassick Co.	Bridgeport, Conn.
06812	Torrington Mfg. Co., West. Div.	Van Nuys, Calif.
07115	Corning Glass Works Electronic Components Dept.	Bradford, Pa.
07137	Transistor Electronics Corp.	Minneapolis, Minn.
07261	Avnet Corp.	Los Angeles, Calif.
07263	Fairchild Semiconductor Corp.	Mountain View, Calif.
07933	Rheem Semiconductor Corp.	Mountain View, Calif.
07980	Boonton Radio Corp.	Boonton, N.J.
08718	Cannon Electric Co. Phoenix Div.	Phoenix, Ariz.
08792	CBS Electronics Semiconductor Operations, Div. of C.B.S. Inc.	Lowell, Mass.
09134	Texas Capacitor Co.	Houston, Texas
09250	Electro Assemblies, Inc.	Chicago, Ill.
10646	Carborundum Co.	Niagara Falls, N.Y.
12697	Clarostat Mfg. Co.	Dover, N.H.
14655	Cornell Dubilier Elec. Corp.	So. Plainfield, N.J.
15909	The Daven Co.	Livingston, N.J.
16758	Delco Radio Div. of G. M. Corp.	Kokomo, Ind.
18873	E. I. DuPont and Co., Inc.	Wilmington, Del.
19315	Eclipse Pioneer, Div. of Bendix Aviation Corp.	Teterboro, N.J.
19500	Thomas A. Edison Industries, Div. of McGraw-Edison Co.	West Orange, N.J.
19701	Electra Manufacturing Co.	Kansas City, Mo.
20183	Electronic Tube Corp.	Philadelphia, Pa.
21520	Fansteel Metallurgical Corp.	No. Chicago, Ill.
21335	The Fafnir Bearing Co.	New Britain, Conn.
21964	Fed. Telephone and Radio Corp.	Clifton, N.J.
24446	General Electric Co.	Schenectady, N.Y.
24455	G. E., Lamp Division	Nela Park, Cleveland, Ohio
24655	General Radio Co.	West Concord, Mass.
26462	Grobet File Co. of America, Inc.	Carlstadt, N.J.
26992	Hamilton Watch Co.	Lancaster, Pa.
28480	Hewlett-Packard Co.	Palo Alto, Calif.
33173	G. E. Receiving Tube Dept.	Owensboro, Ky.
35434	Lectrohm Inc.	Chicago, Ill.
37942	P. R. Mallory & Co., Inc.	Indianapolis, Ind.
39543	Mechanical Industries Prod. Co.	Akron, Ohio
40920	Miniature Precision Bearings, Inc.	Keene, N.H.
42190	Muter Co.	Chicago, Ill.
43990	C. A. Norgren Co.	Englewood, Colo.
44655	Ohmite Mfg. Co.	Skokie, Ill.
48620	Precision Thermometer and Inst. Co.	Philadelphia, Pa.
49956	Raytheon Mfg. Co.	Waltham, Mass.
54294	Shallcross Mfg. Co.	Selma, N.C.
55026	Simpson Electric Co.	Chicago, Ill.
55933	Sonotone Corp.	Elmsford, N.Y.
55938	Sorenson & Co., Inc.	So. Norwalk, Conn.
56137	Spaulding Fibre Co., Inc.	Tonawanda, N.Y.
56289	Sprague Electric Co.	North Adams, Mass.
59446	Telex, Inc.	St. Paul, Minn.
61775	Union Switch and Signal, Div. of Westinghouse Air Brake Co.	Pittsburgh, Pa.
62119	Universal Electric Co.	Owosso, Mich.
64959	Western Electric Co., Inc.	New York, N.Y.
65092	Weston Inst. Div. of Daystrom, Inc.	Newark, N.J.
70119	Advance Electric and Relay Co.	Burbank, Calif.
70276	Allen Mfg. Co.	Hartford, Conn.
70309	Allied Control Co., Inc.	New York, N.Y.
70563	Amperite Co., Inc	New York, N.Y.
70903	Belden Mfg. Co.	Chicago, Ill.
70998	Bird Electronic Corp.	Cleveland, Ohio
71002	Birnbach Radio Co.	New York, N.Y.
71218	Bud Radio Inc.	Cleveland, Ohio
71286	Camloc Fastener Corp.	Paramus, N.J.
71313	Allen D. Cardwell Electronic Prod. Corp	Plainville, Conn.
71400	Bussmann Fuse Div. of McGraw-Edison Co.	St. Louis, Mo.
71450	Chicago Telephone Supply Co.	Elkhart, Ind.
71468	Cannon Electric Co.	Los Angeles, Calif.
71471	Cinema Engineering Co.	Burbank, Calif.
71482	C. P. Clare & Co.	Chicago, Ill.
71590	Centralab Div. of Globe Union Inc.	Milwaukee, Wis.
71700	The Cornish Wire Co.	New York, N.Y.
71744	Chicago Miniature Lamp Works	Chicago, Ill.
71753	A. O. Smith Corp., Crowley Div.	West Orange, N.J.
71785	Cinch Mfg. Corp.	Chicago, Ill.
71984	Dow Corning Corp.	Midland, Mich.
72136	Electro Motive Mfg. Co., Inc.	Willimantic, Conn.
72354	John E. Fast & Co.	Chicago, Ill.
72619	Dialight Corp.	Brooklyn, N.Y.
72656	General Ceramics Corp.	Keasbey, N.J.
72758	Girard-Hopkins	Oakland, Calif.
72765	Drake Mfg. Co.	Chicago, Ill.
72825	Hugh H. Eby Inc.	Philadelphia, Pa.
72928	Gudeman Co.	Chicago, Ill.
72982	Erie Resistor Corp.	Erie, Pa.
73061	Hansen Mfg. Co., Inc.	Princeton, Ind.
73138	Helipot Div. of Beckman Instruments, Inc.	Fullerton, Calif.
73293	Hughes Products Div. of Hughes Aircraft Co.	Newport Beach, Calif.
73445	Amperex Electronic Co., Div. of North American Phillips Co., Inc.	Hicksville, N.Y.
73506	Bradley Semiconductor Corp.	New Haven, Conn.
73559	Carling Electric, Inc.	Hartford, Conn.
73682	George K. Garrett Co., Inc.	Philadelphia, Pa.
73743	Fischer Special Mfg. Co.	Cincinnati, Ohio
73793	The General Industries Co.	Elyria, Ohio
73905	Jennings Radio Mfg. Co.	San Jose, Calif.
74455	J. H. Winns, and Sons	Winchester, Mass.
74861	Industrial Condenser Corp.	Chicago, Ill.
74868	Industrial Products Co.	Danbury, Conn.
74970	E. F. Johnson Co.	Waseca, Minn.
75042	International Resistance Co.	Philadelphia, Pa.
75173	Jones, Howard B., Division of Cinch Mfg. Corp.	Chicago, Ill.
75378	James Knights Co.	Sandwich, Ill.
75382	Kulka Electric Mfg. Co., Inc.	Mt. Vernon, N.Y.
75818	Lenz Electric Mfg. Co.	Chicago, Ill.
75915	Littelfuse Inc.	Des Plaines, Ill.
76005	Lord Mfg. Co.	Erie, Pa.
76210	C. W. Marwedel	San Francisco, Calif.
76433	Micamold Electronic Mfg. Corp.	Brooklyn, N.Y.
76487	James Millen Mfg. Co., Inc.	Malden, Mass.
76530	Monadnock Mills	San Leandro, Calif.
76545	Mueller Electric Co.	Cleveland, Ohio
76854	Oak Manufacturing Co.	Chicago, Ill.
77068	Bendix Corp., Bendix Pacific Div.	No. Hollywood, Calif.
77221	Phaostron Instrument and Electronic Co.	South Pasadena, Calif.
77342	Potter and Brumfield, Inc.	Princeton, Ind.
77630	Radio Condenser Co.	Camden, N.J.
77634	Radio Essentials Inc.	Mt. Vernon, N.Y.
77638	Radio Receptor Co., Inc.	Brooklyn, N.Y.
77764	Resistance Products Co.	Harrisburg, Pa.
78283	Signal Indicator Corp.	New York, N.Y.
70471	Tilley Mfg. Co.	San Francisco, Calif.
78488	Stackpole Carbon Co.	St. Marys, Pa.
78790	Transformer Engineers	Pasadena, Calif.
79142	Veeder Root, Inc.	Hartford, Conn.
79251	Wenco Mfg. Co.	Chicago, Ill.
79963	Zierick Mfg. Corp.	New Rochelle, N.Y.
80130	Times Facsimile Corp.	New York, N.Y.

From: F.S.C. Handbook Supplements
H4-1 Dated July 1960
H4-2 Dated Oct. 1960

APPENDIX
CODE LIST OF MANUFACTURERS (Sheet 2 of 2)

CODE NO.	MANUFACTURER	ADDRESS
00131	Electronic Industries Association Any brand tube meeting EIA standards	Washington, D.C.
00248	Oxford Electric Corp.	Chicago, Ill.
00411	Acro Manufacturing Co.	Columbus, Ohio
00486	All Star Products Inc.	Defiance, Ohio
00583	Hammerlund Co., Inc.	New York, N.Y.
00640	Stevens, Arnold, Co., Inc.	Boston, Mass.
01030	International Instruments, Inc.	New Haven, Conn.
01415	Wilkor Products, Inc.	Cleveland, Ohio
01453	Raytheon Mfg. Co., Industrial Tube Division	Quincy, Mass.
01483	International Rectifier Corp.	El Segundo, Calif.
01860	Barry Controls, Inc.	Watertown, Mass.
02042	Carter Parts Co.	Skokie, Ill.
02142	Jeffers Electronics Division of Speer Carbon Co.	Du Bois, Pa.
02170	Allen B. DuMont Labs., Inc.	Clifton, N.J.
02209	Maguire Industries, Inc.	Greenwich, Conn.
02219	Sylvania Electric Prod. Inc., Electronic Tube Div.	Emporium, Pa.
02376	Astron Co.	East Newark, N.J.
02389	Switchcraft, Inc.	Chicago, Ill.
02647	Spencer Thermostat, Div. of Texas Instruments, Inc.	Attleboro, Mass.
02866	Research Products Corp.	Madison, Wis.
02893	Vector Electronic Co.	Glendale, Calif.
03148	Electro Cords Co.	Los Angeles, Calif.
03186	Victory Engineering Corp.	Union, N.J.
03298	Bendix Corp., Red Bank Div.	Red Bank, N.J.
03594	Burroughs Corp., Electronic Tube Div.	Plainfield, N.J.
03777	Model Eng. and Mfg., Inc.	Huntington, Ind.
03821	Loyd Scruggs Co.	Festus, Mo.
04171	Arco Electronics, Inc.	New York, N.Y.
04396	A. J. Glesener Co., Inc.	San Francisco, Calif.
04411	Good All Electric Mfg. Co.	Ogallala, Neb.
04970	Sarkes Tarzian, Inc.	Bloomington, Ind.
05474	R. M. Bracamonte & Co.	San Francisco, Calif.
05660	Kolled Kords, Inc.	New Haven, Conn.
05911	Seamless Rubber Co.	Chicago, Ill.
06684	Radio Corp. of America, RCA Electron Tube Div.	Harrison, N.J.
08140	Cutler-Hammer, Inc.	Lincoln, Ill.
09473	General Electric Distributing Corp.	Schenectady, N.Y.
09179	U.S. Rubber Co., Mechanical Goods Div.	Passaic, N.J.
09970	Bearing Engineering Co.	San Francisco, Calif.
91418	Radio Materials Co.	Chicago, Ill.
91506	Augat Brothers, Inc.	Attleboro, Mass.
91637	Dale Products, Inc.	Columbus, Neb.
91662	Elco Corp.	Philadelphia, Pa.
91737	Gremar Mfg. Co., Inc.	Wakefield, Mass.
91827	K F Development Co.	Redwood City, Calif.
91929	Micro-Switch Div. of Minneapolis Honeywell Regulator Co.	Freeport, Ill.
92196	Universal Metal Products, Inc.	Bassett Puente, Calif.
93332	Sylvania Electric Prod. Inc., Semiconductor Div.	Woburn, Mass.
93369	Robbins and Myers, Inc.	New York, N.Y.
93410	Stevens Mfg. Co., Inc.	Mansfield, Ohio
93983	Insuline-Van Norman Ind., Inc. Electronic Division	Manchester, N.H.
94144	Raytheon Mfg. Co., Receiving Tube Div.	Quincy, Mass.
94145	Raytheon Mfg. Co., Semiconductor Div.	Newton, Mass.
94154	Tung-Sol Electric, Inc.	Newark, N.J.
94197	Curtiss-Wright Corp., Electronics Div.	Carlstadt, N.J.
94310	Tru Ohm Prod. Div. of Model Engineering and Mfg. Co.	Chicago, Ill.
95236	Allies Products Corp.	Miami, Fla.
95238	Continental Connector Corp.	Woodside, N.Y.
95263	Leecraft Mfg. Co., Inc.	New York, N.Y.
95265	National Coil Co.	Sheridan, Wyo.
95987	Weckesser Co.	Chicago, Ill.
96067	Huggins Laboratories	Sunnyvale, Calif.
96095	Hi-Q Division of Aerovox	Olean, N.Y.
96296	Solar Manufacturing Co.	Los Angeles, Calif.
96341	Microwave Associates, Inc.	Burlington, Mass.
96501	Excel Transformer Co.	Oakland, Calif.
97539	Automatic and Precision Mfg. Co.	Yonkers, N.Y.
97966	CBS Electronics, Div. of C.B.S., Inc.	Danvers, Mass.
98141	Axel Brothers Inc.	Jamaica, N.Y.
98220	Francis L. Mosley	Pasadena, Calif.
98278	Microdot, Inc.	So. Pasadena, Calif.
98291	Sealectro Corp.	New Rochelle, N.Y.
98405	Carad Corp.	Redwood City, Calif.
98734	Palo Alto Engineering Co., Inc.	Palo Alto, Calif.
98925	Clevite Transistor Prod. Div. of Clevite Corp.	Waltham, Mass.
99109	Columbia Technical Corp.	New York, N.Y.
99313	Varian Associates	Palo Alto, Calif.
99800	Delevan Electronics Corp.	East Aurora, N.Y.
99821	North Hills Electric Co.	Great Neck, L.I., N.Y.
99848	Wilco Corporation	Indianapolis, Ind.
99934	Renbrandt, Inc.	Boston, Mass.
99942	Hoffman Semiconductor Div. of Hoffman Electronics, Corp.	Evanston, Ill.
99957	Technology Instruments Corp. of Calif.	No. Hollywood, Calif.

THE FOLLOWING H-P VENDORS HAVE NO NUMBER ASSIGNED IN THE LATEST SUPPLEMENT TO THE FEDERAL SUPPLY CODE FOR MANUFACTURERS HANDBOOK.

0000A	Amp, Inc.	Hawthorne, Calif.
0000B	Chicago Telephone of Calif.	S. Pasadena, Calif.
0000C	Connor Spring Mfg. Co.	San Francisco, Calif.
0000D	Connex Corp.	Oakland, Calif.
0000E	Fisher Switches, Inc.	San Francisco, Calif.
0000F	Malco Tool and Die	Los Angeles, Calif.
0000G	Microwave Engineering Co.	Palo Alto, Calif.
0000H	Philco Corp. (Lansdale Division)	Lansdale, Pa.
0000I	Telefunken (c/o American Elite)	New York, N.Y.
0000J	Ti Tal, Inc.	Berkeley, Calif.
0000K	Transitron Electronic Sales Corp.	Wakefield, Mass.
0000L	Winchester Electronics, Inc.	Santa Monica, Calif.
0000M	Western Coil Div. of Automatic Ind., Inc.	Redwood City, Calif.
0000N	Nahm-Bros. Spring Co.	San Leandro, Calif.
0000P	Ty-Car Mfg. Co., Inc.	Holliston, Mass.
0000R	Metro Cap. Div., Metropolitan Telecommunications Corp.	Brooklyn, N.Y.
0000S	Moulton Electronics	San Carlos, Calif.

00015-4
Revised 15 March 1961

From: F.S.C. Handbook Supplements
H4-1 Dated July 1960
H4-2 Dated Oct. 1960